Design for Milling Machining Training

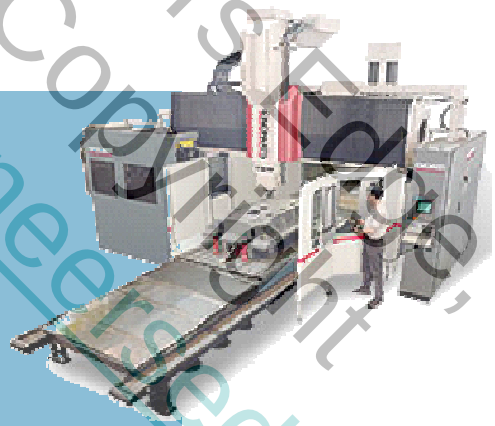

Written by Kelly L. Bramble

Engineers Edge

www.engineersedge.com

Design for Milling Machining
Design for Manufacturability

Edited by:
Kelly Bramble (Engineers Edge)

The following documents have been used as reference material (cited and not cited).

Geometric Boundaries, Interpretation and Application of Geometric Dimensioning and Tolerancing, 2000 – 2011, Kelly Bramble
Engineers Edge, Solutions by Design, 2000 – 2011
Machinery's Handbook, 23rd Edition
Kents Mechanical Engineers Handbook, Twelfth Edition
Eshback, Handbook of Engineering
Design for Manufacturability & Concurrent Engineering, Dr. David M. Anderson
Nonferrous Metals, Reynolds Metals Company, Michael H, Skillingberg
Engineering Drawing and Design, Fourth Edition, Jensen Helsel
Industrial Fluid Poser, Volume 2-4th Edition, Charles S. Hedges
Design for Excellence, James G. Bralla, 1996
Chipless Machining, Charles Wick, 1960
Impact and Cold Extrusion of Metals, John L. Everhart, P. E. Metallurgical Engineer Chemical Publishing Company, Inc. New York, 1964
Broaching Fundamentals, General Broach Company, Morenci, MI
American Machinist, Dressing for Grinding Success, Charles Bates, 2006
Finish Hard Machining; Surface Integrity and Fatigue Life, C. Richard Liu, PHD
McDonnell Douglas, (1978) Design Handbook
Superconducting Supercollider Laboratory, Universities Research Association (URA), Design Specifications
Fermi National Accelerator Laboratory Design and Manufacturing Standards Handbook
Department of Defense – Designing and Developing Maintainable Products and System (MIL-HDBK-470A)
Department of Defense – Electronic Design Handbook (MIL-HDBK-349B)

Chapter 7

Design for Milling Machining - General

Virtually all machining involves the use of a fluted single-point-contact cutting tool to remove material. Material that is before the cutting tool path compresses, separates and moves away from the the cutting tool as the tool moves into the surface (See Figure 7.0). Heat energy is created during the material/chip removal process. This heat energy is often removed by applying a coolant fluid to the work-piece. In addition to removing heat, the fluid acts to lubricate the tool and reduce friction.

Grinding, honing and lapping operations are very similar in tool action to single-point-contact machining tools. The difference is that the cutter is an abrasive type machining tool. The abrasive actually performing the cutting is very small when compared to fluted single-point-contact cutting tools .

In general, the difference between milling and lathe or turning manufacturing is that in milling the tool is rotating, and in turning the part is rotating and the cutting tool held rigid.

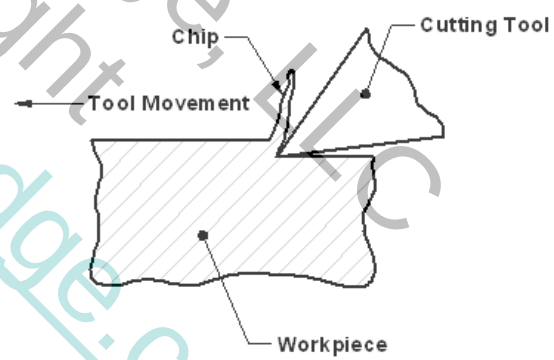

Figure 7.0

Design Guidelines:

- Avoid features which require machining operations. If the part can be designed such that machining operation can be excluded or replaced by operations such as forming, casting, or extrusion, which for each the manufacturing cost is almost always less for medium to high production level manufacturing.
- Surface finish roughness should be the roughest possible and meet functional requirements. This will allow machine processes to cut material faster and not require additional expensive operations like reaming, grinding, lapping or polishing.

Design for Machining - General

- Consult manufacturing about work-holding requirements. If possible, include work-holding features.
- Avoid features which will require cutting tools with sharp corners or points. Cutting tools with sharp edges are prone to breakage and accelerated wear.
- Avoid requiring post machining operations on cast, molded, formed parts when the as-produced features are adequate.
- Work-holding features should be rigid enough to endure clamping forces required to secure the part during machining.
- Features which are at normal or perpendicular angles to one-another are preferred.
- Avoid deep pockets, holes, or other features that require long rigid tooling.
- Avoid internal shouldered or undercut features, as these features require special tools and processes.
- Avoid thin flexible wall sections, deflection due to tool forces will result in arbitrary surface location and form tolerances.
- Check for adequate room or clearance for tooling, fixtures, and machine elements.
- Try to always design features such that standard size cutting tools and inserts with the largest possible radii may be used.
- Design features with radii or chamfers at external surface intersections to minimize the burr removal process. (Some organizations prefer radii and others chamfers, consult manufacturing to determine which are preferred).
- Design parts and features around the simplest, least expensive, most readily available fabrication techniques.
- Minimize parts or features requiring EDM, gun drilling, special coatings when there are commodity processes available.
- Avoid excessively large or long features.
- Always review tolerances vs. your actual functional/fit requirements. Do not just use the default tolerances. – Think tolerances through!
- In general, it is easier to fabricate an external feature than an internal feature. When determining tolerances to be distributed between internal and external mating features, define the external feature with the tighter tolerances and allow the internal feature to have a looser tolerance.
- Use existing parts when ever possible (fasteners, backup rings, elements, slips, couplings, springs, fittings, etc.). Consider using standard parts from the following sources: 1) commercial, 2) organizational standard, 3) New.

Milling machines/p ex shaping, removing large amounts of material ce planar surfaces, cutouts, slot, and hole featur ical, ratchets, sprockets, cams, and other sha

The cost of milling Milling machines can accommodate an ar fixtures. Therefore, milling operations can be fa or part of any tool and die work, prototyping, a

Mass production, sp typically used to combine milling operations v may include index tables, transfer equipment

There are many typ ing machines are:

- Column
- Bed Ty
- Special
- CNC C

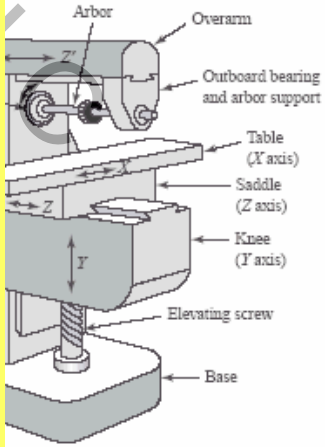

zontal spindle column

Both of the above are knee type milling machine.